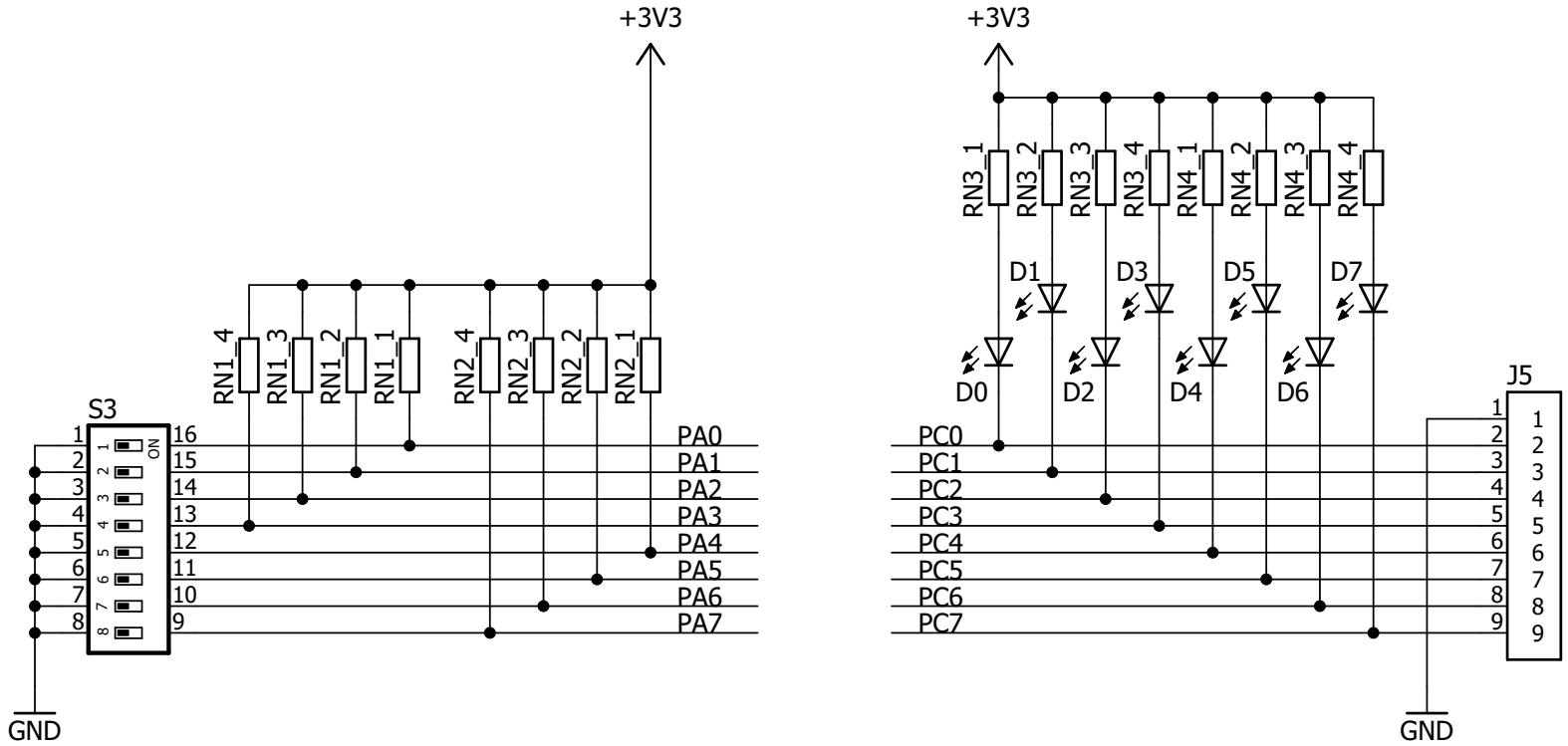

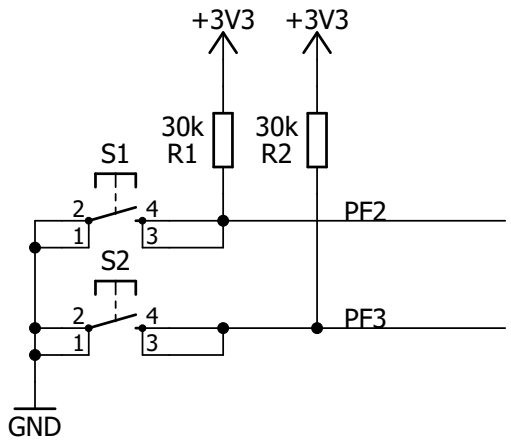

out of the BOX

1/2	
3744_switchLED_backpack v1.2	
Switches and LEDs	
Tim Martin	1.2

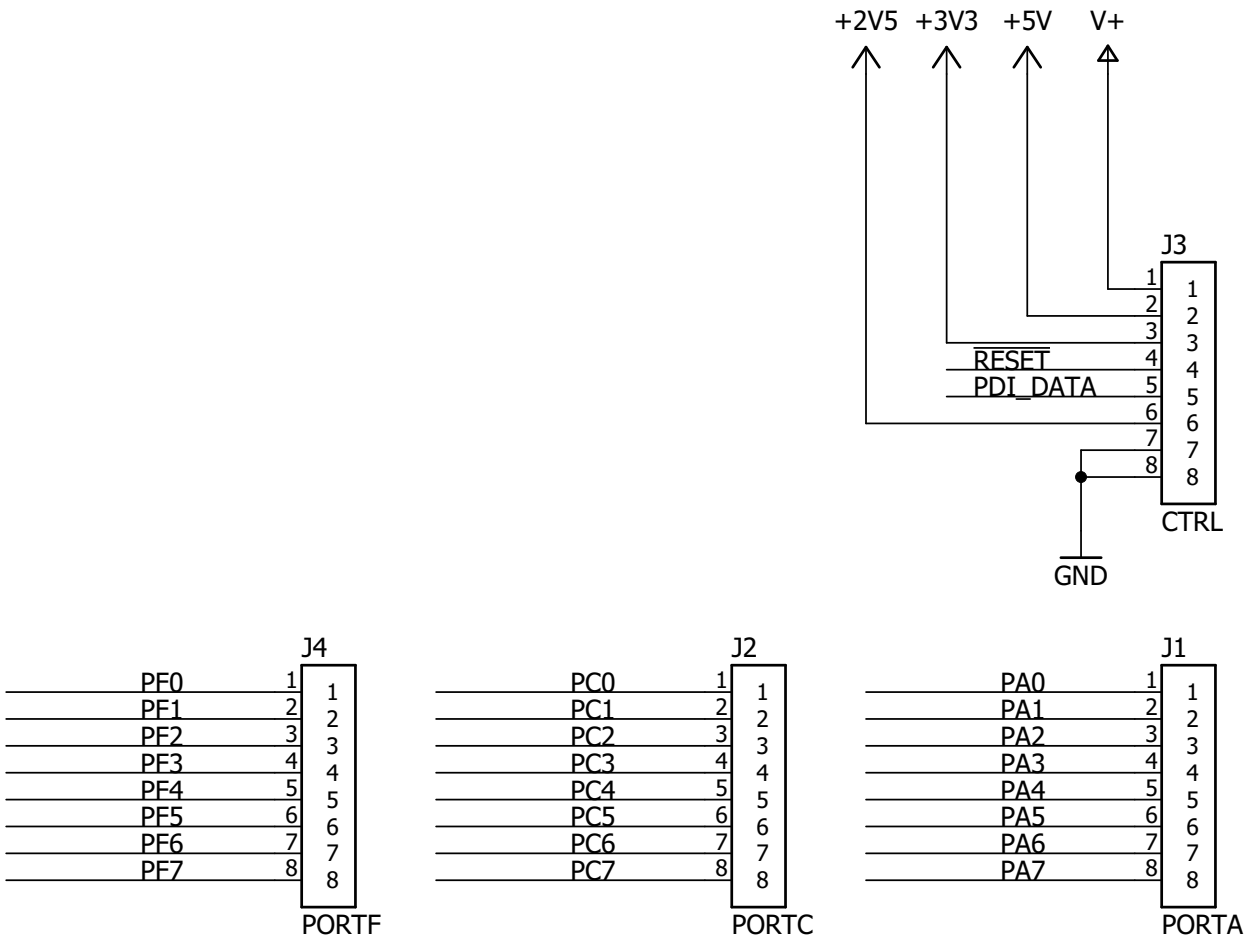

out of the BOX

2/2	
3744_switchLED_backpack v1.2	
Connectors	
Tim Martin	1.2