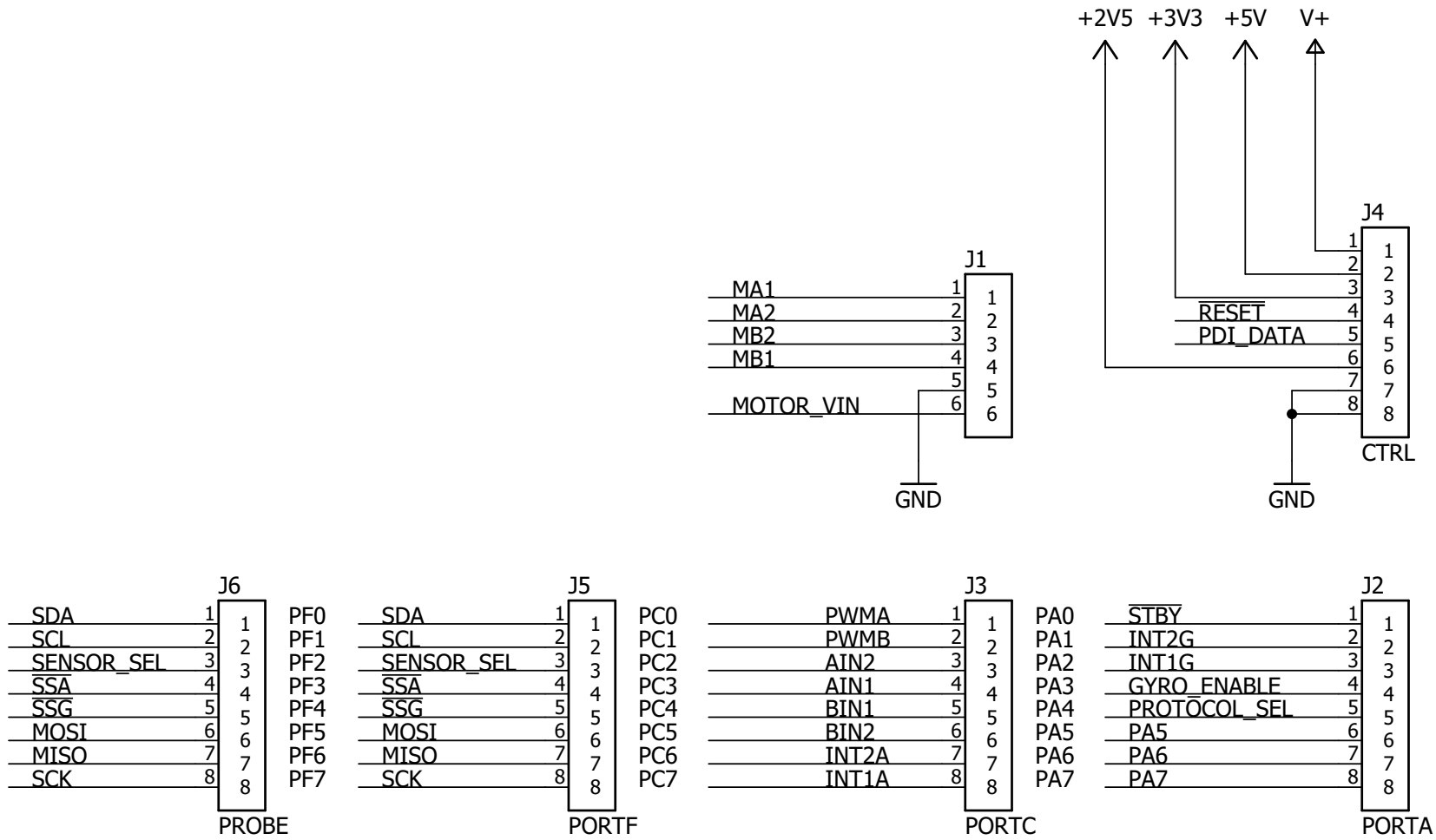

out of the BOX

1/3	
3744_robotics_backpack v1.2	
Connectors	
Tim Martin	1.2

Motor Driver

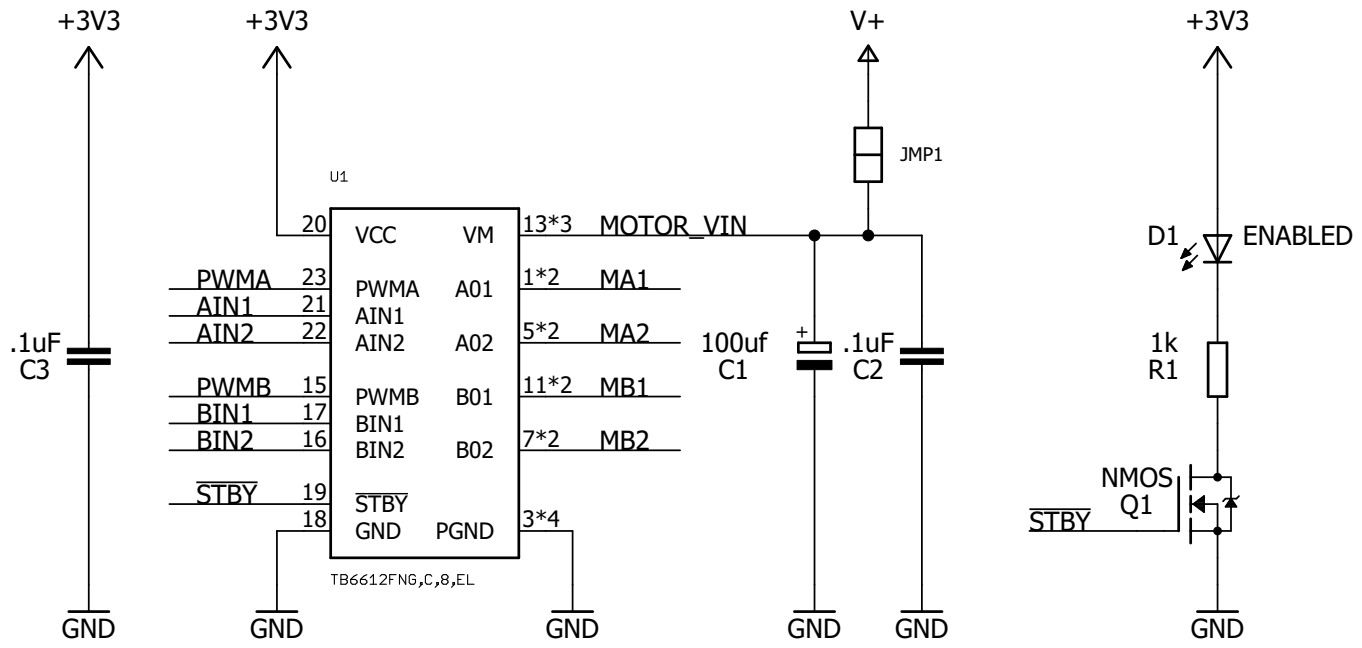

out of the BOX	2/3
	3744_robotics_backpack v1.2
	Motor Control
	Tim Martin 1.2

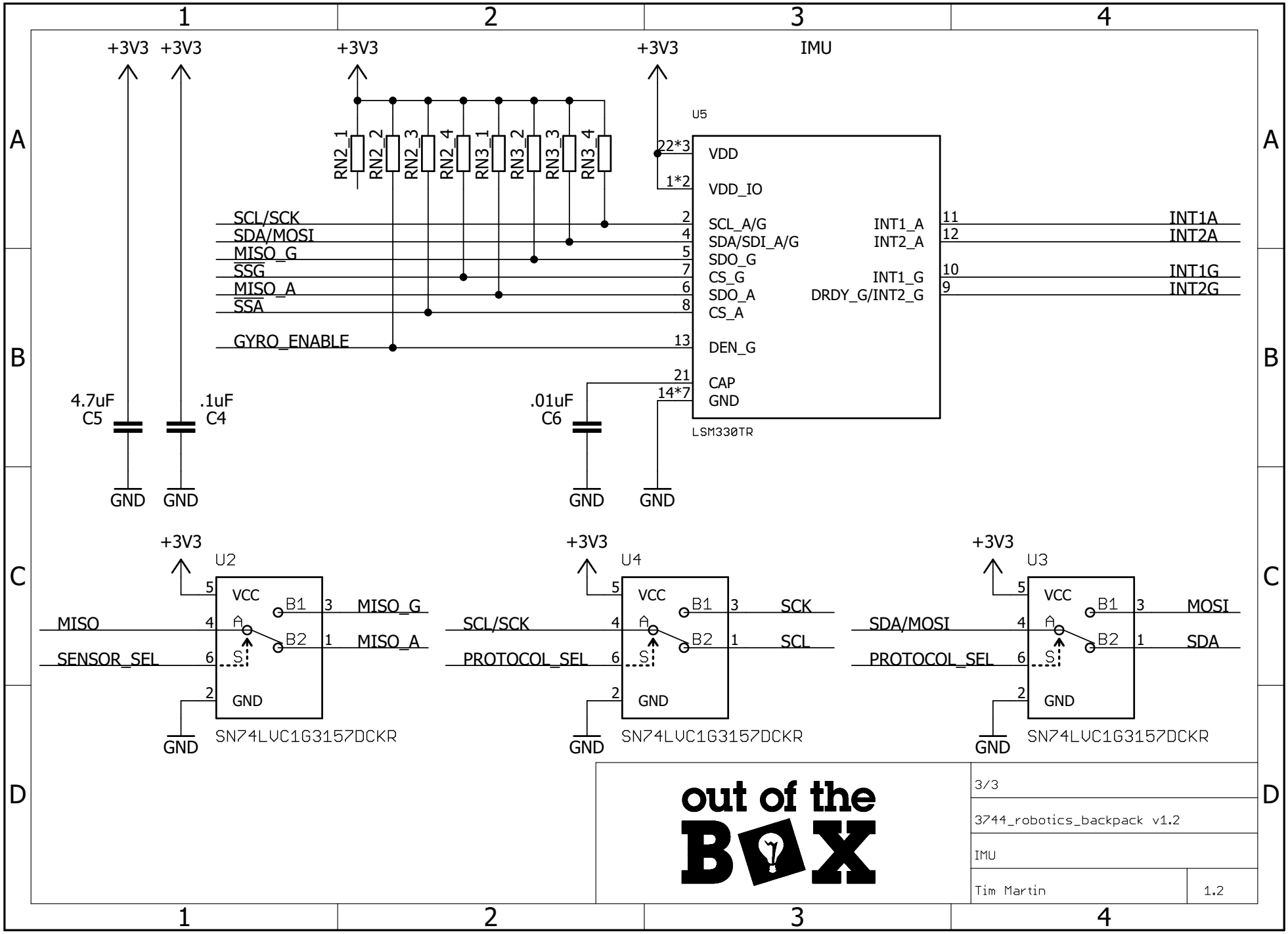
IMU
+3V3
+3V3
+3V3
+3V3
U5
RN2_1
RN2_2
RN2_3
RN2_4
RN3_1
RN3_2
RN3_3
RN3_4
22*3
1*2
VDD
VDD_IO
SCL/SCK
SDA/MOSI
MISO_G
SSG
MISO_A
SSA
GYRO_ENABLE
2
4
5
7
6
8
13
SCL_A/G
SDA/SDI_A/G
SDO_G
CS_G
SDO_A
CS_A
DEN_G
CAP
GND
21
14*7
INT1_A
INT2_A
INT1_G
DRDY_G/INT2_G
11
12
10
9
INT1A
INT2A
INT1G
INT2G
LSM330TR
4.7uF
C5
.1uF
C4
.01uF
C6
GND
GND
GND
GND
+3V3
U2
VCC
B1
B2
A
S
GND
5
4
6
2
3
1
MISO
SENSOR_SEL
MISO_G
MISO_A
SN74LVC1G3157DCKR
GND
+3V3
U4
SCL/SCK
PROTOCOL_SEL
SCK
SCL
SN74LVC1G3157DCKR
GND
+3V3
U3
SDA/MOSI
PROTOCOL_SEL
MOSI
SDA
SN74LVC1G3157DCKR
GND
out of the BOX
3/3
3744_robotics_backpack v1.2
IMU
Tim Martin
1.2