Chapter 3

Electronic Assembly Technique

3.1 Electronic Assembly Technique

If there are places in life where "neatness counts," electronic assembly is one of them. A neatly-built and carefully soldered board will perform well for years; a sloppily- and hastily-assembled board will cause on-going problems and failures on inopportune occasions.

This section will cover the basics of electronic assembly: proper soldering technique, component mounting technique, and component polarities.

By following the instructions and guidelines presented here, you will make your life more enjoyable when debugging time rolls around. A rule of thumb is that a job may take one hour to solder, but if there is a mistake, it take 3 hours to undo. A little extra care will save you time in the long run.

3.1.1 Soldering Technique

Figure 3.1 shows proper soldering technique. The diagram shows the tip of the soldering iron being inserted into the joint such that it touches both the lead being soldered *and* the surface of the PC board.

Then, solder is applied into the joint, *not* to the iron directly. This way, the solder is melted *by the joint*, and both metal surfaces of the joint (the lead and the PC pad) are heated to the necessary temperature to bond chemically with the solder. The solder will melt into the hole and should fill the hole entirely. Air or gaps in the hole can cause static discharges which may damage some components.

Figure 3.2 shows the typical result of a bad solder joint. This figure shows what happens if the solder is "painted" onto the joint after being applied to the iron directly. The solder has "balled up," refusing to bond with the pad (which did not receive enough heat from the iron).

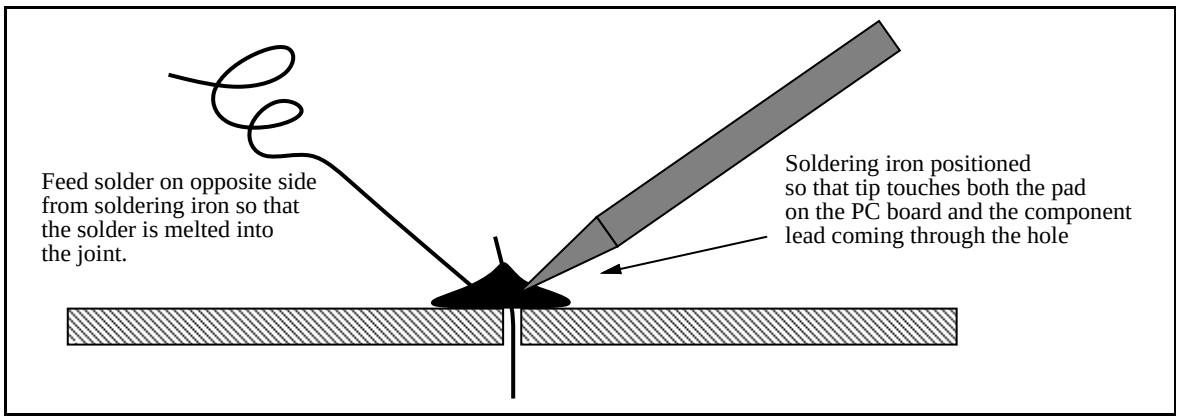

Figure 3.1: Proper Soldering Technique

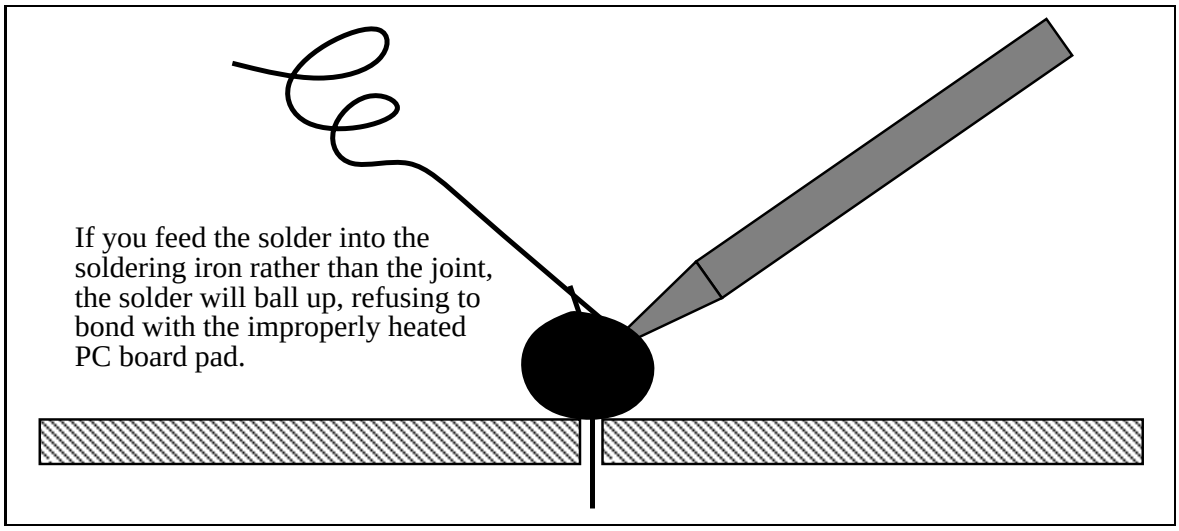

Figure 3.2: Improper Soldering Technique

With this technique in mind, please read the following list of pointers about electronic assembly. All of these items are important and will help develop good skills in assembly:

1. Keep the soldering iron tips away from everything except the point to be soldered. The iron is *hot* and can easily damage parts, cause burns, or even start a fire. Keep the soldering iron in its holder when it is not being held.

2. Make sure that there is a damp sponge available used for cleaning off and tinning the tip. Soldering is basically a chemical process and even a small amount of contaminants can prevent a good joint from being made.

3. Always make sure that the tip is *tinned* when the iron is on. Tinning protects the tip and improves heat transfer.

   To tin the iron, clean the tip and wipe it on a damp sponge and then immediately melt some fresh solder onto the tip. The tip should be shiny and coated with solder.

   If the iron has been idle for a while, always clean and then re-tin the tip before continuing.

4. The tips of the irons are nickel-plated, so do not file them or the protective plating on the tips will be removed.

5. A *cold solder joint* is a joint where an air bubble or other impurity has entered the joint during cooling. Cold solder joints can be identified by their dull and mottled finish. The solder does not flow and wrap around the terminal like it should.

   Cold joints are brittle and make poor electrical connection. To fix such a joint, apply the tip at the joint until the solder re-melts and flows into the terminal. If a cold solder joint reappears, remove solder with desoldering pump, and re-solder the joint.

6. Do not hold the iron against the joint for an extended period of time (more than 10 seconds), since many electronic components or the printed circuit board itself can be damaged by prolonged, excessive heat. Too much heat can cause the traces on the printed circuit board to burn off.

   Some components that are particularly sensitive to heat damage are: diodes, ICs, and transistors.

7. It is good practice to tin stranded wire before soldering to other components. To tin the wire, first strip the insulation, and twist the strands. Apply heat with the soldering iron and let the solder flow between the strands.

8. After a component has been soldered, clip the component's leads (wires coming out of the component) away from the printed circuit board. Leave about a $\frac{1}{8}''$ of the lead sticking out of the board. When clipping the leads, *face the board and the lead down into a garbage bag or into your hand. Leads tend to shoot off at high speeds, and can fly into someone's eye.*

3.1.2 Desoldering Technique

It takes about ten times as long to desolder a component than it did to solder it in the first place. This is a good reason to be careful and take one's time when assembling boards; however, errors will inevitably occur, and it's important to know how to fix them.

The primary reasons for performing desoldering are removing an incorrectly-placed component, removing a burnt-out component, and removing solder from a cold solder joint to try again with fresh solder.

Two main methods of desoldering are most common: desoldering pumps and desoldering wick. The 6.270 toolkit includes a desoldering pump as standard equipment.

To use a desoldering pump, first load the pump by depressing the plunger until it latches. Grasp the pump in one hand and the soldering iron the other, and apply heat to the bad joint. When the solder melts, quickly remove the soldering iron and bring in the pump in one continuous motion. Trigger the pump to suck up the solder while it is still molten.

Adding additional solder to a troublesome joint can be helpful in removing the last traces of solder. This works because the additional solder helps the heat to flow fully into the joint. The additional solder should be applied and de-soldered as quickly as possible. Don't wait for the solder to cool off before attempting to suck it away.

The desoldering pump tip is made of Teflon. While teflon is heat-resistant, it is not invincible, so not jam the teflon tip directly into the soldering iron. Solder will not stick to Teflon, so the desoldering operation should suck the solder into the body of the pump.

Desoldering works effectively when the joint is hot, and there is ample solder to be removed. Additional solder can be added to joints that are difficult to desolder. The additional solder transfers heat to the existing solder, allowing it to be de-soldered more easily.

3.1.3 Component Types and Polarity

There will be a variety of electronic components in use when assembling the boards. This section provides a brief introduction to these components with the goal of teaching you how to properly identify and install these parts when building the boards.

Component Polarity

Polarity refers to the concept that many electronic components are not symmetric electrically. A polarized device has a right way and a wrong way to be mounted. Polarized components that are mounted backwards will not work, and in some cases will be damaged or may damage other parts of the circuit.

The following components are always polarized:

- diodes (LEDs, regular diodes, other types)
- transistors
- integrated circuits

Capacitors are an interesting case, because some are polarized while others are not. Fortunately, there is a rule: large capacitors (values 1 μF and greater) are generally polarized, while smaller ones are not.

Resistors are a good example of a non-polarized component: they don't care which direction electricity flows through them. However, in the 6.270 board, there are *resistor packages*, and these have non-symmetric internal wiring configurations, making them polarized from a mounting point of view.

The following paragraphs discuss the aforementioned components individually, explaining standardized component markings for identifying a component's polarity.

Resistors Resistors are small cylindrical devices with color-coded bands indicating their value (how to read color-coding is explained in a subsequent section).

Most of the resistors in the 6.270 kit are rated for $\frac{1}{8}$ watts, which is a very low power rating. Hence they are quite tiny devices.

A few resistors are much larger. A 2 watt resistor is a large cylindrical device, while a 5 watt resistor has a large, rectangular package.

Resistor Packs Resistor packs are flat, rectangular packages with anywhere from six to ten leads. There are two basic types of resistor pack:

- **Isolated Element.** Discrete resistors; usually three, four, or five per package.
- **Common Terminal.** Resistors with one pin tied together and the other pin free. Any number from three to nine resistors per package.

Figure 3.3 illustrates the internal wiring of an 8-pin resistor pack of each style.

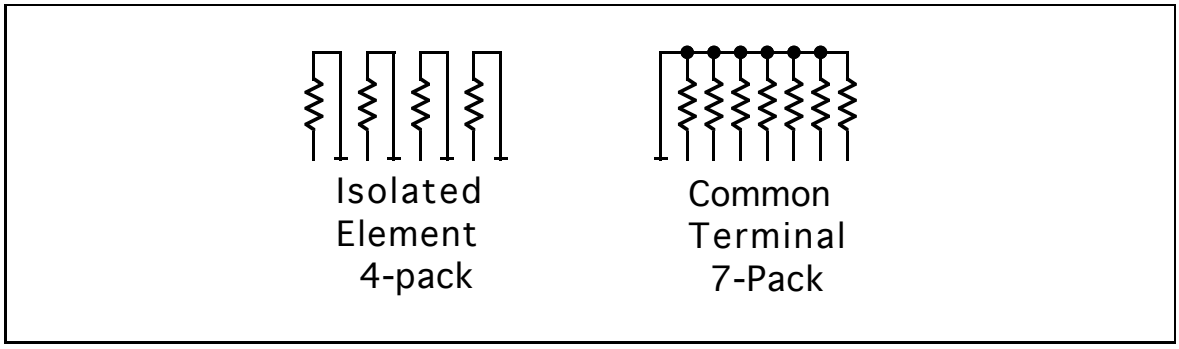

Figure 3.3: Resistor Pack Internal Wiring

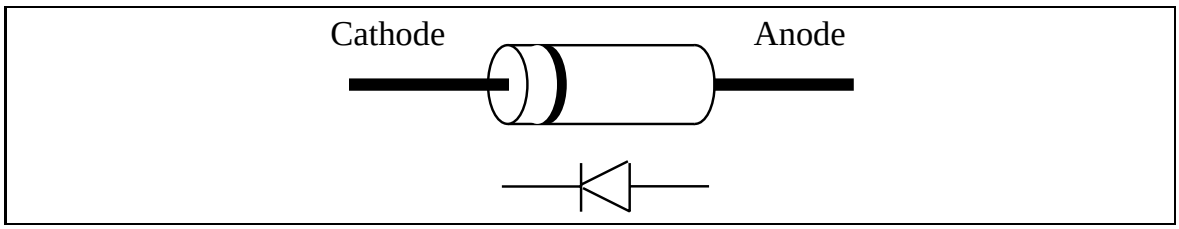

Figure 3.4: Typical Diode Package

Diodes Diodes have two leads, called the *anode* and *cathode*. When the anode is connected to positive voltage with respect to the cathode, current can flow through the diode. If polarity is reversed, no current flows through the diode.

A diode package usually provides a marking that is closer to one lead than the other (a band around a cylindrical package, for example). This marked lead is always the *cathode*.

Figure 3.4 shows a typical diode package.

LEDs *LED* is an acronym for "light emitting diode," so it should not come as a surprise that LEDs are diodes too. An LED's cathode is marked either by a small flat edge along the circumference of the diode casing, or the shorter of two leads.

Figure 3.5 shows a typical LED package.

Integrated Circuits Integrated circuits, or ICs, come in a variety of package styles. Two common types, both of which are used in the 6.270 board design, are called the *DIP* (for *dual-inline package*), and the *PLCC* (for *plastic leaded chip carrier*).

In both types, a marking on the component package signifies "pin 1" of the component's circuit. This marking may be a small dot, notch, or ridge in the package. After pin 1 is identified, pin numbering proceeds sequentially in a counter-clockwise fashion around the chip package.

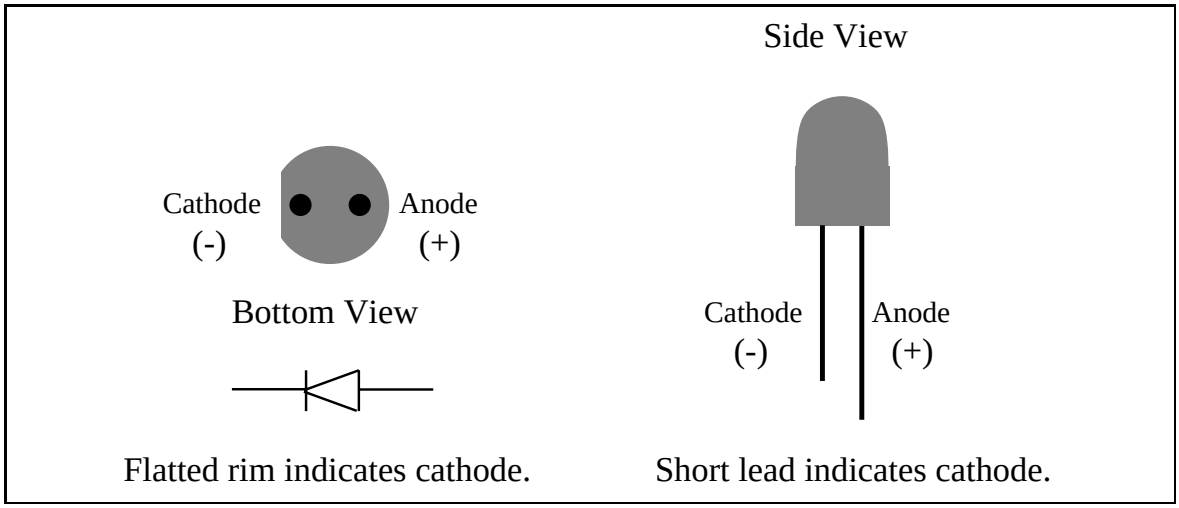

Figure 3.5: Identifying LED Leads

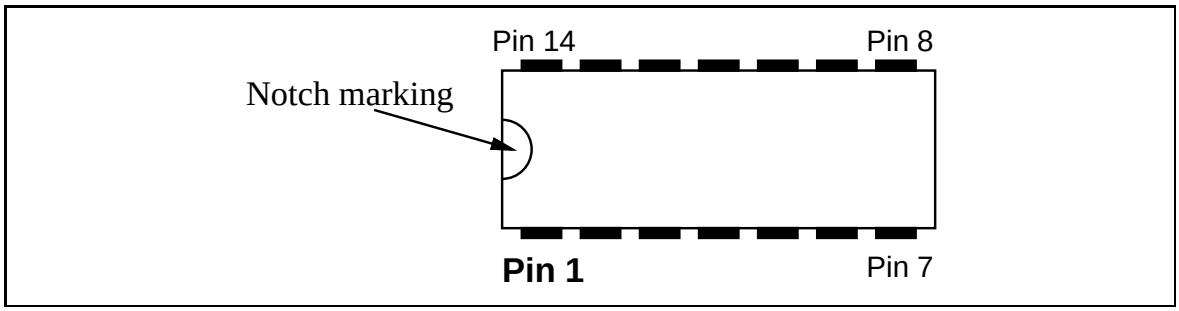

Figure 3.6: Top View of 14-pin DIP

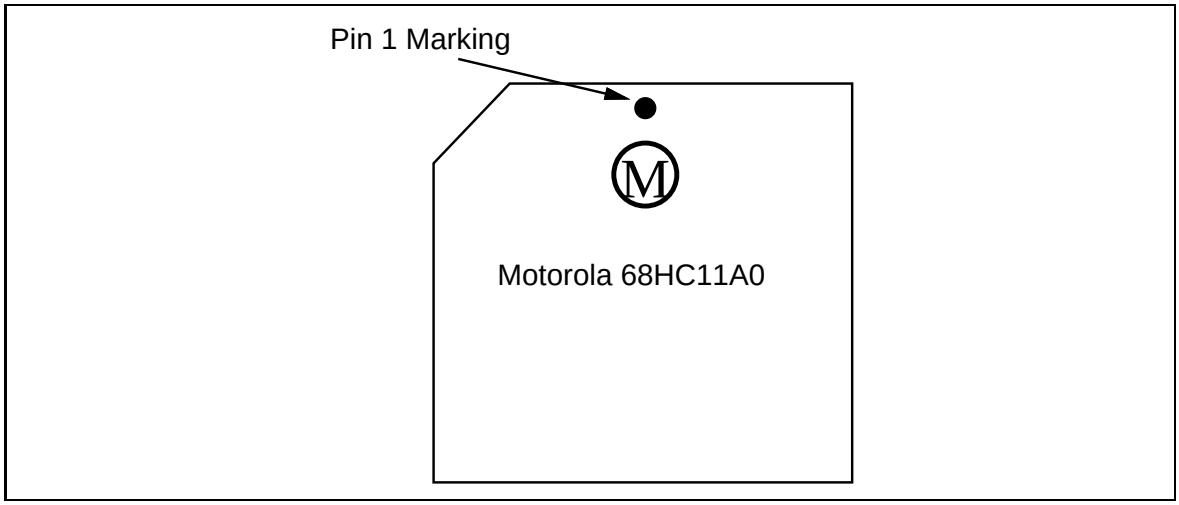

Figure 3.7: Top View of 52-pin PLCC

Figure 3.6 shows the typical marking on a DIP package. Figure 3.7 is a drawing of the PLCC package.

DIP Sockets Most of the integrated circuits (ICs) are socketed. This means that they are not permanently soldered to the 6.270 board. Components that are socketed can be easily removed from the board if they are damaged or defective.

Do not place the components into the sockets before you mount the sockets onto the board! Sockets are also used to avoid the need to solder directly to ICs, reducing the likelihood of heat damage.

DIP sockets also have a similar marking to those found on the components they will be holding. DIP sockets are not mechanically polarized, but the marking indicates how the chip should be mounted into the socket after the socket has been soldered into the board.

PLCC Sockets PLCC sockets *are* polarized, however: a PLCC chip can only be inserted into the its socket the "correct" way. Of course, this way is only correct if the socket is mounted right in the first place.

When assembling the 6.270 board, a marking printed onto the board indicates the correct orientation of the PLCC socket. There are smaller corner holes that will help you orient the socket. Place the socket on the board and double check the polarity before soldering.

Capacitors Quite a few different kinds of capacitors are made, each having different properties. There are three different types of capacitors in the 6.270 kit:

- **Monolithic.** These are very small-sized capacitors that are about the size and shape of the head of a match from a matchbook. They are excellent for use when small values are needed (0.1 μF and less). They are inexpensive and a fairly new capacitor technology. Monolithic capacitors are always non-polarized.

- **Electrolytic.** These capacitors look like miniature tin cans with a plastic wrapper. They are good for large values (1.0 μF or greater). They become bulky as the values increase, but they are the most inexpensive for large capacitances.

  Electrolytics can have extremely large values (1000 μF and up). They are usually polarized except for special cases; all the electrolytics in the 6.270 kit are polarized.

- **Tantalum.** These capacitors are compact, bulb-shaped units. They are excellent for larger values (1.0 μF or greater), as they are smaller and more reliable than electrolytic. Unfortunately they are decidedly more expensive. Tantalum capacitors are always polarized.

As indicated, some capacitors are non-polarized while other types are polarized. It's important to mount polarized capacitors correctly.

On the 6.270 boards, all polarized capacitor placements are marked with a plus symbol (+) and a minus symbol (−). The pads on the boards are also marked differently. The negative lead (−) goes through a square hole and the positive lead (+) goes through the round hole.

The capacitors themselves are sometimes are obviously marked and sometimes are not. One or both of the positive or negative leads may be marked, using (+) and (−) symbols. In this case, install the lead marked (+) in the hole marked (+).

Some capacitors may not be marked with (+) and (−) symbols. In this case, one lead will be marked with a dot or with a vertical bar. This lead will be the positive (+) lead.

Polarized capacitors that are mounted backwards won't work. In fact, they often overheat and explode. Please take care to mount them correctly.

Inductors The inductor used in the 6.270 kit looks like a miniature coil of wire wound about a thin plastic core. It is about the size of a resistor.

Some inductors are coated with epoxy and look quite like resistors. Others are big bulky coils with iron cores.

Inductors are not polarized.

Transistors There are two types of transistors used in the 6.270 kit. Both are three-wire devices. The larger the transistor is used for larger currents.

Transistors are polarized devices.

The table shown in Figure 3.8 summarizes this discussion with regard to polarity issues.

Device	Polarized?	Effect of Mounting Incorrectly
Resistor	no	
Isolated R-Pack	no	
Common R-Pack	yes	circuit doesn't work
Diode	yes	circuit doesn't work
LED	yes	device doesn't work
Monolithic capacitor	no	
Tantalum capacitor	yes	explodes
Electrolytic capacitor	yes	explodes
DIP socket	yes	user confusion
PLCC socket	yes	52-pin severe frustration
Integrated circuit	yes	overheating; permanent damage
Inductor	no	
Transistor	yes	circuit doesn't work

Figure 3.8: Summary of Polarization Effects

3.1.4 Component Mounting

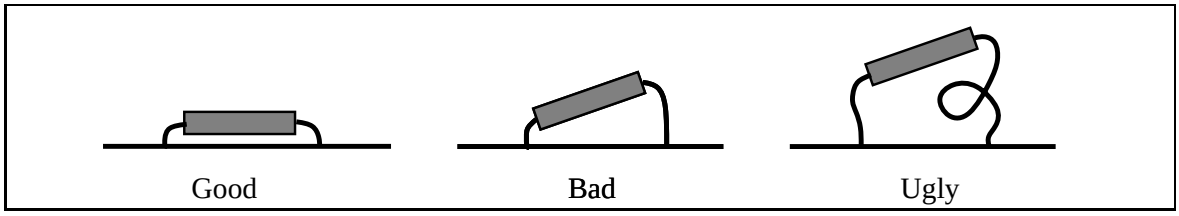

Figure 3.9: Flat Component Mounting

When mounting components, the general rule is to *try to mount them as close to the board as possible.* The main exception are components that must be folded over before being soldered; some capacitors fall into this category.

Components come in two standard packaging types: axial and radial. Axial mounts, shown in figure 3.9 and figure 3.10, generally fit right into the holes in the PC board. The capacitors and LEDs in the 6.270 kit are all radial components. The leads of axial components must be bent or modified to mount the component. The resistors, diodes and inductor are all axial components.

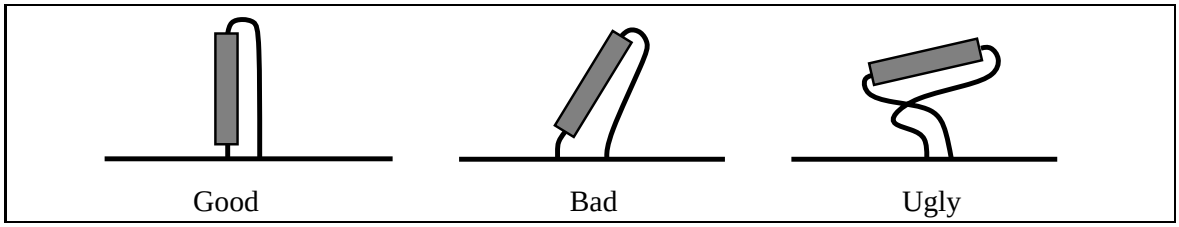

Figure 3.10: Upright Component Mounting

Most resistors and diodes must be mounted upright while others may lay flat. If space has been provided to mount the component flat, then do so, and try to keep it as close to the board as possible. If not, then just bend one lead over parallel to the component, and mount the component tightly.

See Figures 3.9 and 3.10 for clarification.

3.1.5 Component Value Markings

Various electronic components have their values marked on them in different ways. For the same type of component, say, a resistor, there could be several different ways that its value would be marked.

This section explains how to read the markings on resistors and capacitors. Other devices, such as transistors and integrated circuits, have their part number printed clearly on the device package.

Resistors

The largest resistors—in terms of wattage, not resistive value—simply have their value printed on them. For example, there are two large, rectangular 7.5Ωresistors in the 6.270 kit that are marked in this fashion.

Other resistors are labelled using a standard *color code*. This color code consists of three value bands plus a tolerance band. The first two of the three value bands form the value mantissa. The final value band is an exponent.

It's easiest to locate the tolerance band first. This is a metallic silver- or gold-colored band. If it is silver, the resistor has a tolerance of 10%; if it is gold, the resistor has a tolerance of 5%. If the tolerance band is missing, the tolerance is 20%.

The more significant mantissa band begins opposite the tolerance band. If there is no tolerance band, the more significant mantissa band is the one nearer to an end of the resistor.

Figure 3.11 shows the meaning of the colors used in reading resistors.

A few examples should make this clear.

- *brown, black, red*: 1,000Ω, or 1kΩ.

Color	Mantissa Value	Multiplier Value
Black	0	1
Brown	1	10
Red	2	100
Orange	3	1000
Yellow	4	10,000
Green	5	100,000
Blue	6	1,000,000
Violet	7	
Grey	8	
White	9	

Figure 3.11: Resistor Color Code Table

- *yellow, violet, orange*: 47,000Ω, or 47kΩ.
- *brown, black, orange*: 10,000Ω, or 10kΩ.

Capacitors

Reading capacitor values can be confusing because there often are numbers printed on the capacitor that have nothing to do with its value. So the first task is to determine which are the relevant numbers and which are the irrelevant ones.

For large capacitors (values of 1μF and greater), the value is often printed plainly on the package; for example, "4.7μF". Sometime the "μ" symbol acts as a decimal point; e.g., "4μ7" for a 4.7μF value.

Capacitors smaller than 1μF have their values printed in picofarads (pF). There are 1,000,000 pF in one μF.

Capacitor values are similar to resistor values in that there are two digits of mantissa followed by one digit of exponent. Hence the value "472" indicates 47×10^2 picofarads, which is 4700 picofarads or 0.0047 μF.